Plastic Solutions
Supporting the Portable Sanitation Industry

PRODUCT SHEET

Liquid Transport Tanks - Detailed Accessories (1 of 2)

01. Horizontal Tank Frames

Optional tank frame c/w pump plate

02. Pin mounting system

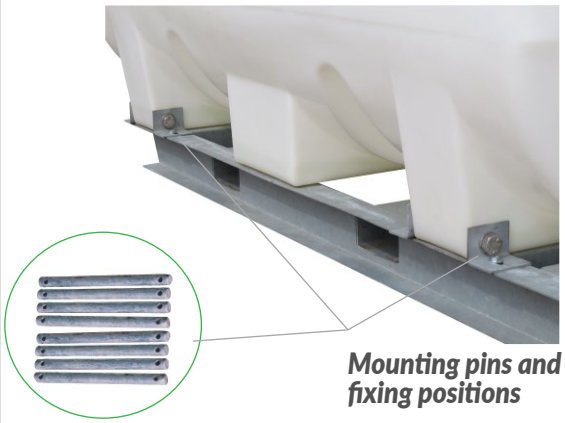

Mounting pins and fixing positions

To help you securely fix your **Liquid Transport Tank** to a vehicle or trailer (etc.) tank sizes from 500 litres upwards include a unique pin mounting feature. Horizontal, longitudinal columns are moulded through the legs of the tanks to accept our mounting pins (or your own bolts), which enable the tank to be mounted to a vehicle, trailer frame or our own, optional frames (see below) without the need for straps. For further stability measures, please see details on Baffle Balls.

Our frames are available in two formats (1) to support and secure the tank alone or (2) with a **pump plate** on which additional equipment can be mounted. e.g. a water pump; pressure washer; dosing pump, spayer pump, AdBlue pump etc. For clarity, the frames are **only rated to lift the tank(s) when empty**, without contents.

01. Horizontal Tank Frames	Typical Dimensions (mm)	SKU / Stock Code
Frame only for 500 L tank	1800 L x 965 W	AGST-FRAME-05
Frame only for 1500 L tank	2420 L x 1052 W	AGST-FRAME-06
Frame only for 3000 L & 5000 L tanks	3041 L x 1620 W	AGST-FRAME-01
Frame only for 6000 L & 8000 L tanks	3940 L x 1660 W	AGST-FRAME-07
Frame only for 10,000 L tank	4780 L x 1760 W	AGST-FRAME-03
Frame and pump plate for 500 L tank	1800 L x 965 W (frame) + 605 L (plate)	AGST-FRAME-PUMP-01
Frame and pump plate for 1500 L tank	2420 L x 1052 W (frame) + 770 L (plate)	AGST-FRAME-PUMP-02
Frame and pump plate for 3000 L & 5000 L tanks	3041 L x 1620 W (frame) + 910 L (plate)	AGST-FRAME-PUMP-03
Frame and pump plate for 6000 L & 8000 L tanks	3940 L x 1660 W (frame) + 915 L (plate)	AGST-FRAME-PUMP-04
Frame and pump plate for 10,000 L tank	4780 L x 1760 W (frame) + 1060 L (plate)	AGST-FRAME-PUMP-05

02. Horizontal Tank Mounting Pins	Details	SKU / Stock Code
Set of 4 mounting pins	for 500 L tank	MOUNTING-PINS-198605-4
Set of 4 mounting pins	for 1500 L tank	MOUNTING-PINS-198615-4
Set of 6 mounting pins	for 3000 L & 5000 L tanks	MOUNTING-PINS-5000-6
Set of 8 mounting pins	for 6000 L & 8000 L tanks	MOUNTING-PINS-198640-8
Set of 8 mounting pins	for 10,000 L tank	MOUNTING-PINS-10000-8

Plastic Solutions (Aldridge) Ltd,
Merchant's Way, Aldridge,
West Midlands, WS9 8SW.
United Kingdom.

© This material is copyright of Plastic Solutions (Aldridge) Ltd and must not be copied, modified, distributed or reproduced in any way or form without our written permission.

UK Freephone: 0800 334 5742
Int: +44 (0)1922 716725
Email: sales@plasticsol.com
Website: www.plasticsol.com

Plastic Solutions
Supporting the Portable Sanitation Industry

PRODUCT SHEET

Liquid Transport Tanks - Detailed Accessories (2 of 2)

03. Tank Emptying or Draining- from base

04. Baffle Balls - for stability on the move

Photo credit - Precision Products Enterprises

03. Emptying or Draining via Ball Valve	Details	SKU / Stock Code
2" Ball Valve Drain Assembly	(1) bolted tank flange, (2) male-male nipple, (3) plastic ball valve with handle, (4) male BSP threaded adaptor to female camlock & (5) dust cap	AGST-DRAIN-ASSY-2-INCH
3" Ball Valve Drain Assembly		AGST-DRAIN-ASSY-3-INCH
4" Ball Valve Drain Assembly		AGST-DRAIN-ASSY-4-INCH
Allows tanks to be drained / emptied under gravity or tank contents to be evacuated by vacuum tanker. Above stock codes use BSP camlock fittings		

Drain and ball valve assemblies fitted to the base of the tank at the front and/or rear enable you to (1) empty the contents via tanker vehicle, (2) connect the tank to a pump or other equipment or (3) link the tank to other tanks (eg. for bulk water storage). A range of diameters and fittings are available (eg. BSP camlock fittings or Bauer type) to suit your particular application and/or the fittings used by your preferred waste carrier.

04. Baffle Balls	Details	SKU / Stock Code
Small Baffle Balls	Designed for Tanks < 1200L, 1 per 7 Litres of Storage	AGST-SPARE-BAFFLE-BALL-01
Small Baffle Balls (Fitted)		AGST-SPARE-BAFFLE-BALL-02
Large Baffle Balls	Designed for Tanks > 1200L, 1 per 50 Litres of Storage	AGST-SPARE-BAFFLE-BALL-03
Large Baffle Balls (Fitted)		AGST-SPARE-BAFFLE-BALL-04

Baffle balls are widely used by liquid transporters to increase stabilty by reducing fluid movement (also known as dynamic load shifting). When cornering or braking with liquid inside a transport tank, baffle balls work to prevent the surge of liquid from front to back and from side to side within the tank. The results are safer driving; reduced stopping distances: reduced fuel usage; and lower mechanical wear and tear on the vehicle. The clip together baffle balls create hundreds of baffle faces at multiple angles so that liquids inside the tank cannot slosh or surge at speed. They are used for road-going vehicles as well as off-road vehicles where the ground is uneven.

Contact us for more information

Plastic Solutions (Aldridge) Ltd,
Merchant's Way, Aldridge,
West Midlands, WS9 8SW.
United Kingdom.

© This material is copyright of Plastic Solutions (Aldridge) Ltd and must not be copied, modified, distributed or reproduced in any way or form without our written permission.

UK Freephone: 0800 334 5742
Int: +44 (0)1922 716725
Email: sales@plasticsol.com
Website: www.plasticsol.com

Document date: 12.04.2023