# GILLES CAFFIER

lamp with "broken" vegetal texture
light grey, black, off white shade
90 pieces' edition
GILLES CAFFIER signed
bulb ES 11W warm light not provided

**references in bold**

W x L x H inches

| | | |
|---|---|---|
| | **LI188BW** | 17 1/8" x 17 1/8" x 37 1/4" |

W x L x H cm
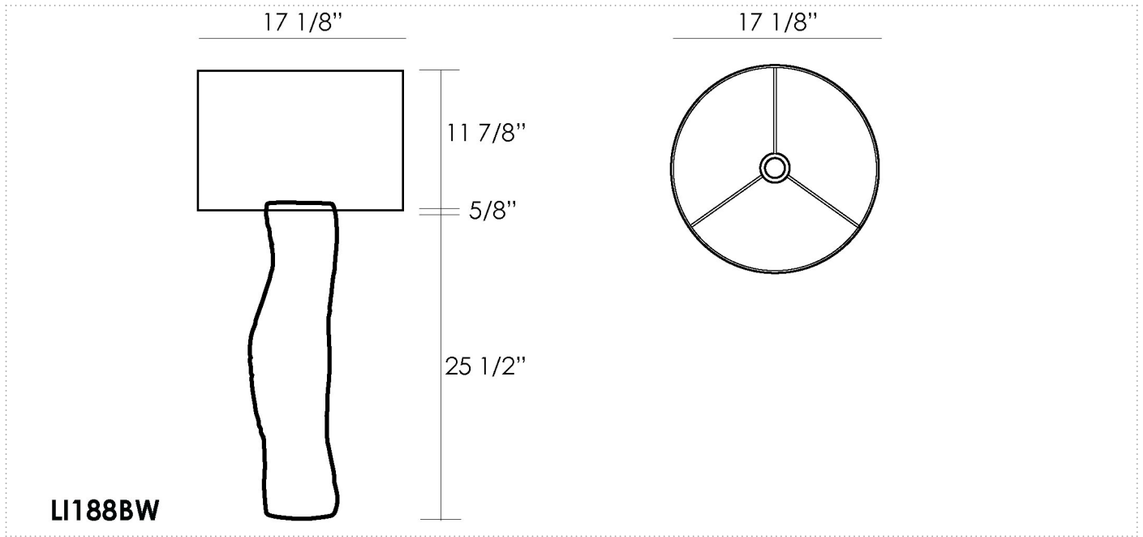
| | | |
|---|---|---|
| | **LI188BW** | 44 x 44 x 95,5 |