Introduction

Why should you upgrade an existing OGN Ground station to Rebroadcast Glider Locations on 869.5MHz? When upgraded the Ground Station is termed an OGN-R Station. -R signifying data rebroadcast

In upgrading to OGN-R you will be helping the gliding and General Aviation Communities (Foot-launched, Gliding, Microlights and Powered Aircraft) in Europe and the UK to improve the interoperability of the various Electronic Conspicuity systems available today. These are ADSB, FLARM, PilotAware, Mode- S and Mode-C. By installing an OGN-R station at your location (Club or House) you will be contributing to the ground network that will assist the interoperability between systems by up-linking situational awareness data to PilotAware equipped aircraft.

In addition as part of the installation you will get a real time, on site Virtual RADAR station that can be displayed on a computer, monitor or TV screen. This will via the OGN-R upgrade show all GA aircraft equipped with Flarm, PilotAware and ADSB in real time and also Mode-S equipped aircraft with a small MLAT† delay. †Note this is currently operational in the UK where we have sufficient MLAT data available from 360RADAR. In mainland Europe we are growing the capability.

We don't expect you to do it all alone. Whilst stocks last PilotAware will provide you with the Radio Bridge and software free of charge and will also provide a Pi2B, free of charge, if you are currently running an earlier model. You will need to provide the rest, as described in this document, which you can do for less than £150.

An OGN-R ground based station will provide about a 30-40Km area of coverage to help aviation safety around your site.

You can do everything yourself or we will help. ogn@pilotaware.com

Interested? Let's go!

Table of Contents Click in the link.

OGN-R PilotAware Uplink

Thank you for offering to help to expand the OGN-R Network to provide additional safety for powered aircraft and gliders alike by up-linking FLARM and Mode-S equipped aircraft co-ordinates to PilotAware equipped aircraft. Thereby making gliders more visible at low cost.

To help you with the costs of upgrading or installing a new OGN-R uplink, PilotAware Ltd will, whilst stocks last, provide a PilotAware Radio Bridge and software FREE OF CHARGE. This is available to supporters who want to increase the OGN-R network both in the UK and mainland Europe. In addition, if required, PilotAware will load and configure the software to make it even easier for you. If you want to know more contact us at mailto:OGN@pilotaware.com and apply for your free stuff.

Upgrading an existing OGN station to OGN-R functionality does not require a high level of technical knowledge. The OGN-R is a technical innovation but the highly technical parts do not need to be understood by the installer or host. These step by step instructions are provided. We will of course be available on line to help. Most of all, you will be making history and its fun.

What Parts are Required

1. A Raspberry Pi Single Board Computer (Pi 2B) Provided Free of Charge if required
2. A PilotAware Radio Bridge Provided Free of Charge
3. An SD Memory Card
4. A n 869.5MHz PilotAware Antenna
5. A 1090MHz Antenna
6. Coaxial cables to connect the antennas to the electronics.
7. An RTLSDR software defined Radio for the 1090MHz reception and detection.
8. A Raspberry Pi Mains-to 5.2V, 2.1A, power supply
9. A simple mechanical timer to turn off the power once a day between 0200 - 0300
10. A Pigtail to connect the Co-Axial cable to the 1090MHz RTL-SDR
11. Antenna mounts to support the antennas

1. The PilotAware Antenna. This is used to **transmit and receive data** to aircraft fitted with PilotAware units operating at **869.5MHz**. The PilotAware antenna is connected to the PilotAware Radio Bridge mounted on the Raspberry pi via a co-axial cable and an SMA connector.

***2.* A 1090MHz receive only Antenna** is also used for the OGN-R station. This antenna collects 1090MHz transmitted data ie ADSB and Mode-S transmissions for use by 360RADAR to contribute to their network and provide Mode-S data for use in PilotAware Mode-S/3D reception. All data collected is also used to provide a feed for a local Virtual RADAR screen which will show local PilotAware, FLARM, ADSB traffic in real time and Mode-S traffic with MLAT delay.

The feed from the 1090MHz Antenna, is connected to the Raspberry Pi via a software defined receiver (SDR). This can be inserted in any of the USB slots but by convention is located in the bottom left hand USB slot on the raspberry Pi unit with the Ethernet socket to the left. The location chosen is then configured in the set up as described later on.

**Note using the latest software the location of the 2 RTLSDRs can be chosen to be located in any slot at the configuration stage. This is because some RTLSDR's are larger than others and this allows easier mechanical fitment. However the slot used must be chosen in the configuration.*

A list of equipment and suppliers is available at the end of this document any queries mailto:OGN@pilotaware.com.

Installation High Level Diagram

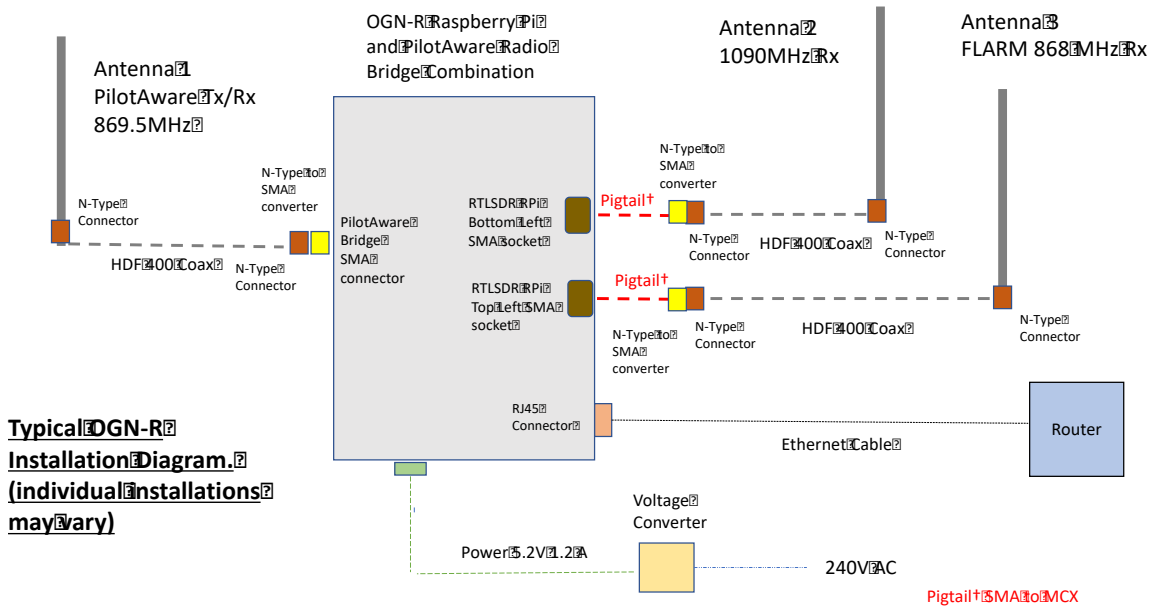

The above diagram is provided as a visualisation of the hardware installation which can be modified for your specific installation. The Raspberry Pi, the Antenna 3 (Flarm 868MHZ Rx), the cable and the Flarm RTLSDR will already be installed in your existing OGN-R Station.

Upgrade

The upgrade of the OGN consists of

1. Selecting a dry location for the electronics with access to 240V and Internet. †
1. Installing the additional external antennas at a suitable location.
2. Making up and running the additional 2 low loss coaxial cable from the antennas to the electronics location.
3. Connecting the parts together
4. Installing and configuring the software for your specific site. (Location, Site Name Password and Email Address)
5. Power up and test.

Location for the Electronics

- The location for the electronics should be as close to the antennas as practically possible. As short a distance as possible is preferred but up to 10 metres is OK. This is to minimise the losses in the Co-Axial cable. *Note up to 16 metres has been shown to work using the recommended HDF 400 or equivalent 50 ohm coaxial cable.*

- Mains power is required within 2 metres of the Raspberry Pi for the Raspberry Pi mains to 5.2v 2.5A power supply.
- The mains power supply to the Raspberry Pi power converter should be via a switched mechanical timer set to turn the power off during the night.. (Please choose a random time around 23:00 to 0400) This will ensure a timely daily reboot of the system. 30 minutes downtime is enough From January 2019, the OGN-R software includes an automatic check for and download of available new software. *Be aware that if you suffer regular power failures the timing of the mechanical timer will drift by the time of the power outage so a periodic check on the timers is advisable.*
- An Ethernet cable is required to connect the Raspberry Pi to the router. This can generally be as long as required. Max 100 metres
- *If the installation is a long way from the router or it is not easy to run a direct link ethernet cable, then the LAN can be extended over the mains using a power line carrier device such as* **devolo** *which has been used successfully on several locations.* *https://www.devolo.co.uk*

Location for the 2 new antennas (PiotAware Tx Rx and 109MHz Rx)

- The antennas should be positioned vertically and as high as possible avoiding obstacles that would get in the way of line of sight transmission and reception, such as walls. The antennas should be a minimum of 30cm apart. Further away the better. Only the PilotAware antenna is transmitting. (It transmits at 869.5MHz so will not affect or be affected by local VHF voice antennas)
- **Each and every installation will be bespok**e. A wide variety of antenna mounts are commercially available from Screw fix, Tool Station and other suppliers in the UK. A list of typical mounts is supplied at the end of these instructions.
- The recommended antennas are supplied with Female N-Type connectors.

Making up the Co-Axial Cables

- HDF 400 (double shielded low loss coaxial cable) or equivalent and N-Type connectors should be used for all antennas for maximum efficiency. Although a smaller cable like RG8X or LM240 can be used for short reaches.
- HDF400 cable is fairly thick and will require a suitable Crimp tool to make off the connectors. If you are just doing the one installation, it may be cheaper to have these cables made up commercially. A crimp tool is about £15.
- One Male and One Female N-Type connector is required for each cable.
- The Male N-type connector on the Co-Axial cable should be offered to the Female N-Type connector on the antenna and the connectors screwed firmly together. The joint should be weather-proofed using self-amalgamating tape.
- This should be repeated for the second antenna.
- The Co-Axial cables should then be dressed to the location of the electronics which should be as close as practically possible. (Take care that you know which cable goes to which antenna by labelling the loose ends.)
- A suitable short pigtail may be required to connect the N-type connector to the RTL-SDR dongle. This will either be a male SMA or Mcx connector depending on the RTLSDR chosen.

Connecting the Electronics

A good tip is to mount the electronic onto a small wall board or box to secure the units without putting stress onto the components or cables. The cables can then be secured with cleats.
The electronics are connected to the following interfaces.

The diagram below is representative only. Your installation may change depending on the RTL-SDR's and connector types used. The following instructions therefore will not be the same for all installations.

1. An N Type to SMA Converter is screwed firmly into the Female N-Type connector of each Coaxial cable.
2. The coaxial cable connected to the PilotAware (869.5MHz) Antenna (shown on the left of the following diagram) is connected firmly to the SMA connector on the PilotAware Bridge mounted as a Hat on top of the Raspberry Pi via the PIO connector.
3. You will already have a Coaxial cable connected to the **FLARM Antenna** which is connected to an existing RTL-SDR. For convention this is connected in the top left hand USB slot when seen with the ethernet slot on the left hand side .
4. The Coaxial cable connected to the **1090MHz Antenna** is connected to the RTL-SDR in the bottom left hand USB slot.
5. The Ethernet cable is connected to the Ethernet port of the Raspberry Pi, with the other end connected to a free port on the local router.
6. The Raspberry Pi power supply is connected to the mains supply via the mechanical timer set to provide power during daylight hours.
7. DO NOT AT THIS POINT TURN THE POWER ON.
8. Make sure that the complete set up is located firmly and that there is no bending moments or other stress on any of the components.
9. Cable cleats and other fixtures should be used to affect a neat installation.
10. The hardware is now set up.

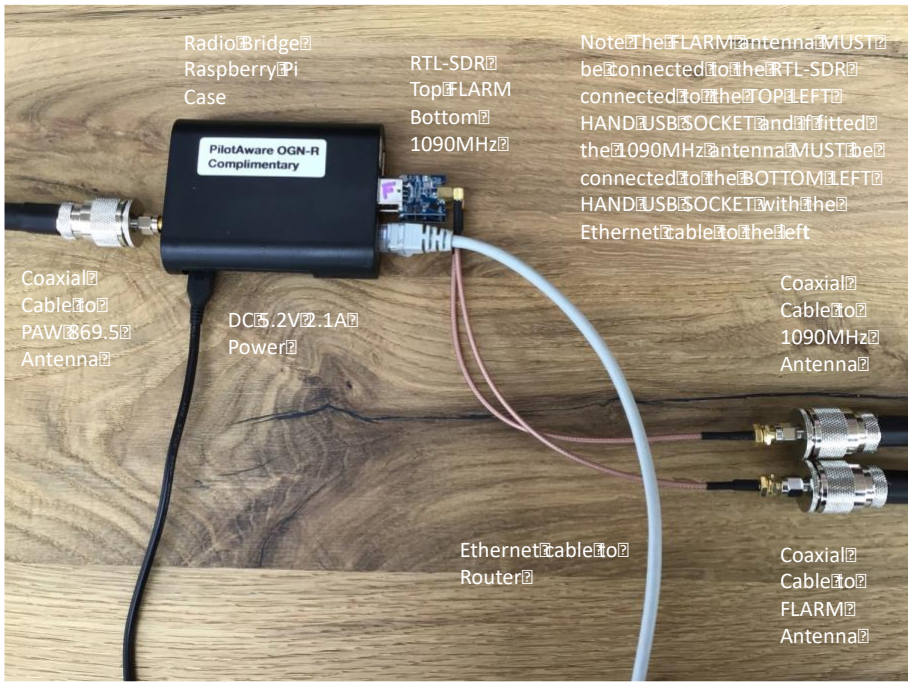

†Note the above picture uses low power RTLSDR dongles available from Stratux as these easily fit the available space. Others may be used if suitable. The RTL-SDR used to connect to your existing Flarm antenna will probably be larger than this as it will have an in built temperature controlled oscillator. The RTL-SDR used for the detection of 1090MHz does not necessarily need a temperature controlled oscillator. If the RTL-SDR's available are larger they can be configured to be inserted in other USB sots in the configuration program described later. If necessary external aluminium enclosures provided with the dongles should be removed.

Locating and Naming your Site

Location Information

You will need to have the **existing unique** location information for your station to hand.
This will include
The station name
The Latitude
The Longitude
The Geoidsepar

Downloading and installing OGN-R Software.

To make the installation of the OGN-R as easy as possible new software has been produced that steps you through the installation process.

You will need to note your existing station name its latitude, longitude and the height of the antenna above mean sea level. These will be required to configure the OGN-R software.

1. Download the latest disk image for the combined OGN/PAW software from http://pilotaware.lode.co.uk/downloads/OGN/PilotAware-OGN.latest.zip
2. This will download a zip file with a name similar to ***PilotAware-OGN.20190713*** into the downloads folder of your computer. The numbers after the '.' Indicate the version date.
3. Place all ***the individual unzipped contents of this file (not the folder)*** into a formatted Micro SD Card. This will require the use of an SD card holder to fit the Micro SD card into the SD slot on your computer.

4. **The root** of the SD card should contain the following folders
   - defaults
   - os
   - overlays

   and many other files.

5. When you have downloaded all the files, eject the card from your computer and load the SD card into SD card holder at the end of the Raspberry Pi card, power up and leave for about 20 minutes to allow the files to unpack and self-configure.
6. Whilst the software is unpacking, there will be a permanent red light (Power) and a flashing green light (Disc access) on the raspberry pi. DO NOT INTERUPT THE POWER SUPPLY AS THIS WILL CORRUPT THE SOFTWARE.
7. You can watch the unpacking progress by attaching a TV or a monitor to the Pi via an HDMI cable. When it has finished the prompt, 'pi' will be seen. The software has now downloaded and has unpacked successfully.

Configuring the Software for your Specific Location.

Shellinabox

The OGN-R software has been developed to make the installation as simple as possible. There are 3 ways to connect to the software to configure the program for your unique location.

1. The most direct way to input the required data is to connect a monitor and keyboard to the Pi. This is done by connecting the Monitor to the HDMI port and the keyboard to any USB port.

2. Alternatively, **connect a computer to the specific IP address allocated locally by your router** to your OGN-R unit. To locate the specific ip address allocated by your router to the raspberry pi (host name ognpaw) connect to the router via a wired Ethernet or WiFi connection. Connect to the router by typing in 192.168.0.1 into your browser. Note this may differ depending on your broadband provider.
3. Once connected to your router you need to locate the IP address that has been allocated to the Raspberry Pi (host name ognpaw) of your OGN-R. To get the actual IP address allocated to the Raspberry Pi you may have to use an advanced menu that is password protected. See your local router instructions. For example, a UK Sky network router generic log in is '**admin'** and the password is '**sky'.** Others will differ. Then choose LAN IP Set Up. For example, if the IP address allocated for your unit with the default hostname 'ognpaw' is 192.168.0.200 then you will connect via 192.168.0.20**.** The allocated address (in this case 192.168.0.20) will vary from router to router.

   *Also, please note if the router is powered down it **may** allocate a different IP address. This is called dynamic IP allocation. This can be overcome by giving the OGN-R a fixed IP address.*

4. Additionally, the ***OGN-R*** software has been developed so that you can run a shell from within a web browser. Google Chrome or Firefox is recommended.
   When connected on the same network as the Pi, navigate to **http://ognpaw.local**
   Note this is NOT https://. You will probably get a prompt to say that this sites is insecure - ignore this and continue to the address. Not all routers allow you to do this as they do not resolve the allocated IP address to the default host name of ognpaw.local. In this case you will have to revert to using the allocated ip address as shown in the previous paragraph 3.

   With each connection type, when connected correctly, you will see the following prompts. Your response is the characters in **red**

login: **pi** ***(Ensure this is pi NOT PI or Pi)***
password: **12345678** (This is the default Password. It is **strongly** recommended to change it during the configuration). ***(Note the password will not appear in the command line as you are typing it.)***
pi@ognpaw: $ **cd rtlsdr-ogn** (changes the directory to where the required files are located)
pi@ognpaw: /rtlsdr-ogn **./PilotAware-OGN.config.sh** (this runs the configuration program)
Note please make sure that the syntax is correct if it is not you will be prompted that there is an error.

You may get the message `sudo: unable to resolve host ognpaw` – ignore this.
Wait a while and if the RTLSDR's are connected you will `see Found 2 SDR's` and you will be told in which of the four USB slots they are located.
The first SDR is required for FLARM 868MHz detection. By convention this is put in the top left hand USB slot with the RJ45 Ethernet socket to the left. The second SDR is for the

1090MHz detection. This is used to provide a 1090MHz feed to 360Radar and the virtual RADAR server.

The screen will look something like this though this may change with later revisions of SW which is dynamic.

```
(15:18:48) FILESYS   : Mount RW
Stopping Services
Do not plug in or remove any SDR dongles whilst this configuration script is running.
It is strongly advised to have the SDR's plugged in and then reboot the Pi before running this configuration
script.
Found 2 SDR's:
Raspberry Pi 2 Model B Rev 1.1
  USB Port Top Left    : dongle ID=1 and is currently allocated to OGN/FLARM reception on 868Mhz
  USB Port Bottom Left : dongle ID=0 and is currently allocated to ADS-B reception on 1090Mhz
  USB Port Top Right   : SDR detected
  USB Port Bottom Right: SDR detected
1 dongle is currently configured for OGN and the other is configured for ADS-B reception
Do you wish to change the dongle configuration [y/n]:
```

[Note if you want to move from convention (say because the dongles are too big), then you can put the dongles in other slots but you will have to re-boot the system. You will then have to declare which dongle you want to be allocated to which frequency 868Mhz for Flarm or 1090MHz for ADSB and Mode-C/S]. You **must** then also ensure that correct antennas are connected to the correctly tuned RTL-SDR. The Flarm antenna will be your existing one.

Check that the dongles are in the right place *(FLARM in top left and 1090MHz in bottom left with the Ethernet cable to the left)* **or** where you have re-allocated them, then answer (**n**)

Now continue to follow the instructions. You will be prompted to provide a new **Password** please do this so no one else can hack your system – they will. Record your password, it can't be recovered by you or us. Consequently a complexly new manual upgrade will be required

You will be prompted to change the host name from (ognpaw). Do not change this unless absolutely necessary and you know what you are doing, otherwise answer **(n)**

You will be prompted to provide a new **Name** for your ground station Answer **(y)** and replace it with in your **existing OGN name** 7 letters max).
You may have seen that OGN uplinks are prefixed with PW i.e. PWEBGW. You do **NOT** need to prefix your name with PW this is done automatically.

The program will require you to input the Latitude, Longitude, Altitude, Height AMSL and Geoid of your location.
Using the values for your existing site.
Provide Station **Latitude** (change default value to the value of your station) Return
Provide Station **Longitude** (change default value to the value of your station). Return

Provide Station **Height AMS**L (change default value to the value of your station). Return

Provide **Geoid** Return
Note the PilotAware Configuration program will calculate the GEOID and suggest what it is. Use this unless you have a more accurate GEOID figure

The software will then install and calibrate the RTLSDR FLARM radio receiver.
This will take about 90 seconds and it will step through 0dB to +50dB. Stages
If all is well a banner will then be shown with your configuration as shown below.
Following this and after up to 10 minutes to connect to the server it will show Starting Services. The OGN-R station is now up and running.

```
##################### Summary #####################
Station Name is                : pawtest1
Station Latitude is            : 52.217521
Station Longitude is           : -1.758672
Station Altitude AMSL  [M] is  : 69
Station Altitude GEOID [M] is  : 50.5038
Station SDR PPM is             : 0
Station SDR Gain is            : 45
Station SDR Freq Centr is      : 923.400
##################### Summary #####################

Starting Services
^[{
```

pi@ognpaw:~/rtlsdr-ogn

Possible Problems

a) If the SW cannot see the FLARM antenna through the RTL-SDR dongle the software program proceeds through the calibration very quickly, This, means that there is no physical connection from the RTLSDR dongle to the FLARM antenna. Suspect the co-axial cable, pigtail or RTLSDR connection. Make sure all connections are secure and that the inner pins of the Co-axial cable connectors are mating properly. If you have an SWR meter available the impedance should be 40-60 ohms and the VSWR between 1 and 2
b) The calibration routine searches for GSM signals for the antenna and RTLSDR calibration. Therefore, you may have difficulty in capturing data in low GSM signal strength areas. So long as some data (Say 6-10 sites) is collected this is OK. This part of the setup is only used to calculate the frequency offset to be used for the particular antenna.
c) If after a successful calibration the program states that it cannot “start service”, this may be that it cannot get through your broadband router to the internet and hence to the OGN servers. If this is the case suspect your router or internet connection.

When connected to the OGN servers via the internet, it can take up to 10 minutes for the station to appear on the OGN map http://ognrange.unseen.org

Testing to see if Your Station is Working

Once your station has registered with the OGN servers it will be displayed on the OGN map.

To check this, connect to the internet and navigate to http://ognrange.unseen.org

When connected, to can locate your site type in PW*Name (*where *Name* is the first 7 digits of your OGN-R Station Name), into the Box "Showing All Choose". Navigate to the approximate area in Europe where your station is located and your site should show up on the map. As the days' progress, you will see all of the targets that you have captured build.
Choosing PWName, will show the PilotAware units captured.
Choosing Name (without PW at the Front) will show the FLARM units captured.
Capturing targets at 50Km+ for PWName and 60Km+ for Name is normal. Unless you are on a geographic flat plane this will not be symmetrical due to local obstructions etc. It will take several weeks to capture enough data to determine the range of your station.

There is a second useful URL https://www.dropbox.com/s/0n5emkw4nm85sw1/ogn-r.txt?dl=0
This can be accessed to see if your station is up or down, what software it is running and the last time it received a response to poll for its status.

Note the OGN-R software will auto update. The best way of doing this is to install a simple mechanical timer (the type used to turn standard lamps on and off) between the mains and the RPi power supply, so that the Raspberry pi is powered down between midnight and 0400 hrs. ON powering up it will install the new software if available.

Checking for captured real time data.

Whilst connected to the same network as the pi using a modern browser such as Chrome or Safari type in the allocated ip address. This will be something like 192.168.0.14, BUT WILL BE SPECIFIC TO YOUR INSTALLATION.

A matrix screen similar to this should appear.

Version 20190327 : Date 2019-03-31 15:35:01 : Station PWWilmcot
P3I(data)=464 MLAT=OK Internet=Connected Radar Login

ICAO	Type	Age	Amb(RND/ACT)	GS(KN)	Dist(KM)	Alt(FT)	Uplink
DDBBC3	O--	-	-	20	2.7	2493	(39.32km,+1279ft)F56F35
405A8C	--M	8	0.30/0.29 NM	132	5.7	3400	(44.84km,+2183ft)F56F35
43EA40	--M	4	0.30/0.21 NM	192	8.2	8725	(37.61km,+7508ft)F56F35
4013A5	--M	7	0.30/0.15 NM	78	33.6	1700	(54.28km,+483ft)F56F35
407074	--M	5	0.30/0.13 NM	95	34.5	1600	-
400976	--M	5	0.30/0.20 NM	145	35.1	1575	-
F56F35	-P-	-	-	39	39.2	1227	-
404083	--M	13	0.30/0.22 NM	61	48.3	1900	(32.13km,+683ft)F56F35
40697E	--M	5	0.30/0.15 NM	110	49.2	2700	(16.01km,+1483ft)F56F35
402B07	--M	6	0.30/0.18 NM	111	49.4	2675	(25.96km,+1458ft)F56F35
400DC7	--M	7	0.50/0.32 NM	166	51.3	3700	-
A0A728	--M	10	0.50/0.36 NM	130	53.6	1700	(55.71km,+483ft)F56F35

The instantaneous, cumulative number and type of aircraft detected will be recorded

Key	
OK	Number of confirmed targets recorded.
NG	Targets Rejected due to not meeting defined requirements.
ICAO	The ICAO of the aircraft being detected
Type	**O**gn - **P**ilotAware - **M**LAT
Age*	Age of MLAT data in seconds
AMB*	RND = Rounded ACT = Actual
Distance (KM)	Distance from the OGN-R station
Altitude	Altitude in feet.
Uplink	What is triggering the uplink.

- Only provided in the UK in Mode-S/3D trial areas

Checks to show that your OGN-R station is Working OK.

To check that the OGN-R station is working, power up a PilotAware unit in the immediate location and from the PilotAware unit you should see:

1. The OGN-R station will be recorded in the top right hand of the PilotAware RADAR Screen.
2. The OGN-R station will be shown as an ICON in the centre of the RADAR screen. *(You must have selected show ground stations on your PilotAware unit using the latest SW release 20190721)*
3. The OGN-R station will appear in the list in the Rosetta Traffic Page
4. The PilotAware with ICAO number, Altitude and Distance will be recorded on the OGN-R Virtual RADAR Screen.

5. FLARM equipped targets will be shown on PilotAware RADAR and also on EasyVFR SkyDemon etc. if the Flight Bag is connected.
6. For the advanced user. There are 3 main processes running.

   (i) ogn-rf
   (ii) ogn-decode
   (iii) pilotaware

   each of these provide logging which can be used for diagnosis. They are accessed in the following way

   $ ssh pi@ognpaw.local

   Note To see logging from ogn-rf, use the following command. **$ nc localhost 50000**
   If there ae no error reports then all is good. Error reports will indicate faults.

   Note To see logging from ogn-decode use the following command. **$ nc localhost 50001**
   This will display captured data from FLARM

   Note To see logging from Pilotaware, Display Flarm, P3i & MLAT **$ nc localhost 50002**

Other Apps to show that the OGN-R is working

There are several Apps that can be used to show historical and real time data from your OGN-R site. On each site zoom into your local area and check your site progress.

The Open Glider Network at http://ognrange.onglide.com
Spot the Gliders at http://live.glidernet.org

Advice is also available at forum.pilotaware.com

For Advanced users

The disk image is operated in a safe mode, which means it cannot normally be over written In order to gain write access type.
$ sudo /root/mount rw.bash
To write protect type.
$ sudo /root/mount ro.bash

The software is running as a service to start/stop the service
$ sudo service rtlsdr-ogn stop
$ sudo service rtlsdr-ogn start

Updating the Software on Your OGN-R Installation

Note onec you have installed the latest software then software and operating system updating is done **automatically.**

If, however you want for force a software update then use the following script.

```
pi@ognpaw:~ $ cd rtlsdr-ogn
pi@ognpaw:~/rtlsdr-ogn $
pi@ognpaw:~/rtlsdr-ogn $ ./PilotAware-OGN.update.sh
```

The PilotAware 360Radar Virtual RADAR Station.

Introduction

If you have installed all 3 antennas PilotAware, FLARM and 1090MHz then you will be able to use a browser equipped computer or tablet to drive a Virtual RADAR display for your clubhouse or any other location. This display can be a computer itself, a monitor or large TV.

The PilotAware 360Radar Virtual RADAR **station is for entertainment only and currently cannot be used for air traffic control or any form of guidance**. PilotAware 360 Radar, will give you real time data (negligible delay) of all PilotAware, FLARM and ADSB equipped aircraft in your region. This will be typically 30-60Km for PilotAware and FLARM equipped aircraft and 40- 100Km for ADSB equipped aircraft depending on the height of the target aircraft. In addition, Mode-S aircraft that are being interrogated by Secondary Surveillance Radar (SSR) will also be shown on the screen with the normal limitations of multilateration (MLAT). These are

(i) The target Mode-S aircraft must have been interrogated by Primary RADAR. This may not happen below 800ft.
(ii) There will be a delay of between 1 and 10 seconds for the MLAT trace to be refreshed.

To gain access to PilotAware 360Radar Virtual Radar you will need to have OGN-R software revision 20190210 or later. If you have software that is earlier than this, you will need to undertake a full manual software download in to ensure that the correct Operating System is being used.

Connecting to PilotAware Radar360 Virtual RADAR

- If you have maintained the recommended hostname of ognpaw, using a modern Browser Safari, Chrome, Firefox etc connect to the same local network (LAN) as the ground station and in the browser search bar type in ognpaw.local. You should get a screen that looks something like the following screenshot. There may be more rows indicating more local MLAT aircraft but this is not important.

(Note if your router or cable modem does not resolve ognpaw.local to the IP address allocated to the host ognpaw then you will have to type in the allocated IP address. This will be something like 192.168.0.40. Of course the 192.168.0.40 bit will be specific to your router and will be different. Log into your router admin maintenance to find out what it is.

Version 20190315 : Date 2019-03-17 17:55:35 : Station PWWilmcot
P3I(data)=26363 MLAT=OK Internet=Connected Radar Login

ICAO	Type	Age	Amb(RND/ACT)	GS(KN)	Dist(KM)	Alt(FT)	Uplink
D794E2	-P-	-	-	0	0.0	246	-
405EF5	OPM	4	0.50/0.30 NM	271	23.4	-	
404781	OPM	4	0.30/0.16 NM	141	58.6	-	

On the second row, a URL entitled **Radar** will be seen. Click on this to activate PilotAware 360 Radar Virtual RADAR.

After about 10 – 20 seconds, a screen resembling this will appear.

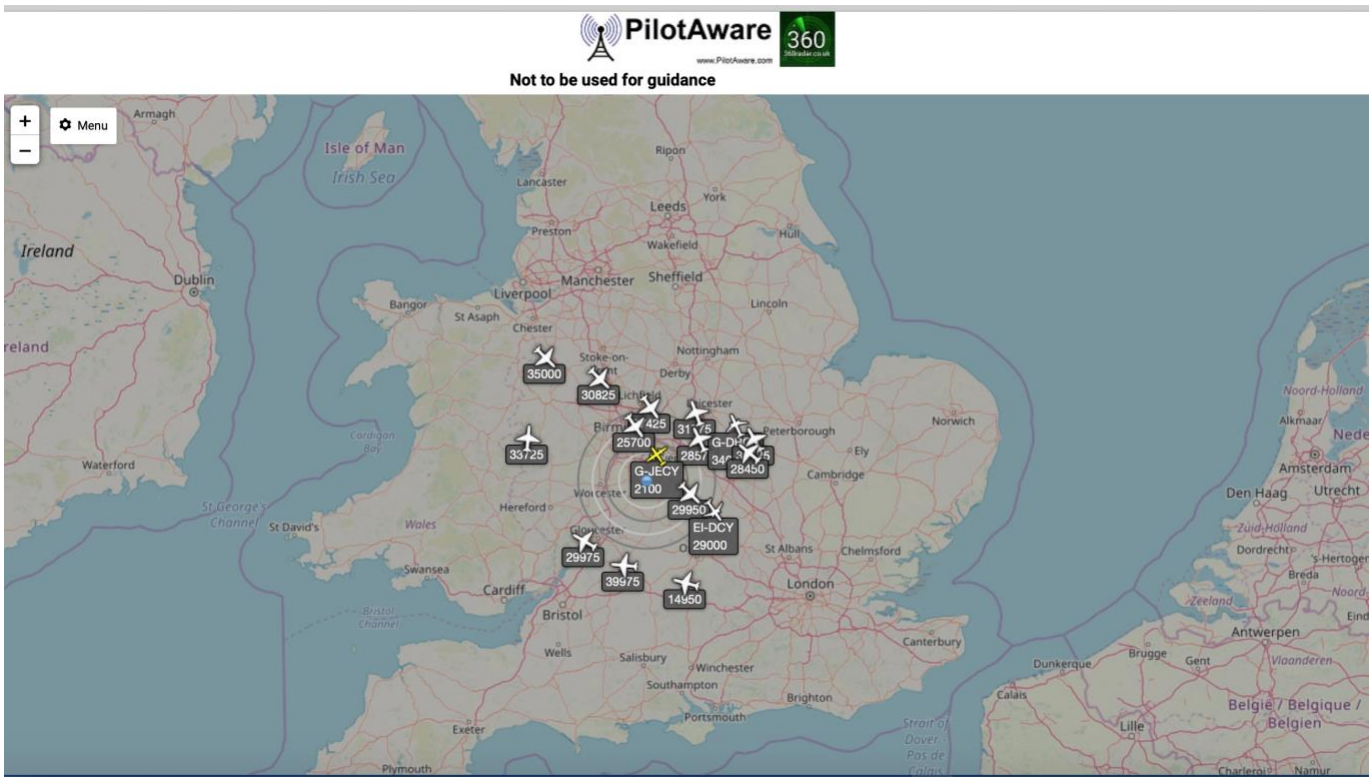

At the top left corner, there is a menu which when activated allows configuration of the screen. The menu has several options.

It is not intended to go through each menu here as they are self-explanatory. However, at the high level they are:

General
This allows the user to configure the centre of the map on your current or other location and chose the units for the heights speeds etc.

Map
Allows the user to apply distance rings choose colours etc

Aircraft
This allows a multitude of parameters to be set for the target aircraft detected.

List
This allows the aircraft list to be configured

Filters
The filters page allows the user to generate a range of filters for customising the display.

Full operating instructions are available at as
http://www.virtualradarserver.co.uk

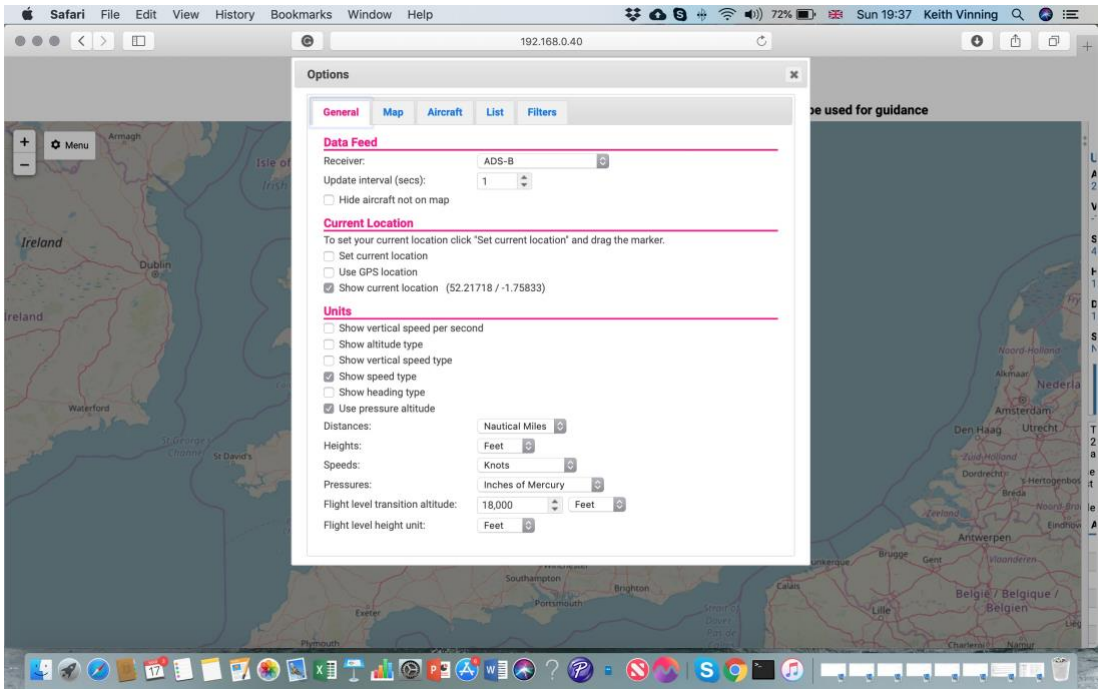

Please remember as good as PilotAware VRS is this must not be used for air traffic management, control or guidance.

Addendum

Parts Required to build an OGN-R uplink

The parts below are recommended but can be substituted for other suitable parts.

Part	Supplier
Raspberry Pi 2B	
P3i Radio Bridge	
Case	
RTLSDR 2 required (1) for FLARM (2) for 1090	These are available from https://www.ebay.co.uk/itm/UK-Software-Defined-Radio-Receiver-RTL-SDR-with-RTL2832-ADC-Chip-SMA-F-

	Connector/163855712001?_trkparms=aid=111001%26algo=REC.SEED%26ao=1%26asc=20160727114228%26meid=736d88f47ccb4272835157f1628c2282%26pid=100h https://www.amazon.co.uk/Nooelec-NESDR-SMArt-SDR-R820T2-Based/dp/B01HA642SW/ref=sr_1_2?crid=I9MZD3SVNOHB&keywords=nooelec+sdr+dongle&qid=1569836681&sprefix=Nooelec%2Caps%2C141&sr=8-2 Please note that you will have to remove the aluminium enclosures for both of these to fit into the Pi this is OK. Other RTL-SDR's are available however you **MUST** choose one that uses the RTL2832U & R820T2 chipsets.
Pigtail. You can choose to use a pigtail to connect between the Co-Ax cable and the RTL-SDR. Make sure the end connections are correct for the RT:SDR you have chosen	https://www.amazon.co.uk/Bewinner-Connection-Military-Applications-Antennas-default/dp/B07PGPYY6R/ref=sr_1_fkmr0_2?keywords=Ntype+to+SMA+pigtail+RG316&qid=1569837131&sr=8-2-fkmr0
CoAx Cable	https://www.wifi-antennas.co.uk/hdf400-coaxial-cable-per-metre.html
N-Type Connector Male	https://www.wifi-antennas.co.uk/n-type-male-crimp-connector-hdf400.html
N-Type Connector Female	https://www.wifi-antennas.co.uk/n-type-female-crimp-connector-hdf400.html
N-type Male to SMA	https://www.wifi-antennas.co.uk/sma-male-to-n-type-male-adaptor.html
HDF 400 Crimp tool	https://www.wifi-antennas.co.uk/catalogsearch/result/?q=crimp+tool+HDF+400
SD Card	https://www.amazon.co.uk/SanDisk-MicroSDHC-Memory-Label-Change/dp/B001D0ROGO/ref=asc_df_B001D0ROGO/?tag=googshopuk-21&linkCode=df0&hvadid=309924738384&hvpos=1o1&hvnetw=g&hvrand=4556519776435982955&hvpone=&hvptwo=&hvqmt=&hvdev=c&hvdvcmdl=&hvlocint=&hvlocphy=1007082&hvtargid=pla-309497947842&psc=1
RPi Charger	https://www.amazon.co.uk/Raspberry-Pi-Power-adapter-UK/dp/B01CCR5P8U/ref=sr_1_5?s=computers&ie=UTF8&qid=1533245620&sr=1-5&keywords=Raspberry+Pi+charger
Ethernet cable	https://www.amazon.co.uk/CSL-Ethernet-Gigabit-1000Mbit-compatible/dp/B00J3UYNII/ref=sr_1_6?s=computers&ie=UTF8&qid=1533245968&sr=1-6&keywords=Ethernet+cable
Mechanical timer	https://www.amazon.co.uk/PowerMaster-438242-Plug-Mechanical-Timer/dp/B007OUQB48/ref=sr_1_29?ie=UTF8&qid=1533246329&sr=8-29&keywords=mechanical+timer
FLARM Antenna	ogn@pilotaware.com or https://fjhuahong.manufacturer.globalsources.com/si/6008806990472/pdtl/Omni-antenna/1130137384/868MHz-9dBi-omni-base-antenna-fiberglass-antenna-N.htm
PilotAware Antenna	ogn@pilotaware.com or https://fjhuahong.manufacturer.globalsources.com/si/6008806990472/pdtl/Omni-antenna/1130172675/868MHz-7-dBi-Omni-Antenna-fiberglasss-antenna-N-F.htm

1090Mhz antenna	ogn@pilotaware.com or https://fjhuahong.manufacturer.globalsources.com/si/6008806990472/pdtl/Omni-antenna/1130172675/1090MHz-7-dBi-Omni-Antenna-fiberglasss-antenna-N-F.htm

There are several inexpensive commercially available antennae mounts available here are just a few examples. Others are available on line to meet your specific application.

https://www.screwfix.com/p/labgear-tv-aerial-stand-off-bracket-9-/90874?tc=HB3&ds_kid=92700024374092992&ds_rl=1248154&ds_rl=1245250&ds_rl=1247848&gclid=Cj0KCQiAw9nUBRCTARIsAG11eic35MmxwVB1JF2d8v2ONaZ0cGs15lNBii4W0G6m0JDnaeCaNCIDrSYaAgukEALw_wcB&gclsrc=aw.ds&dclid=CImVw422ydkCFY6u7QodGlIC5w

https://www.screwfix.com/p/labgear-29935lab-tv-l-cranked-mast/21470

https://www.toolstation.com/shop/Electrical/d190/TV+%26+Satellite/sd3084/TV+Aerial+%26+Satellite+Dish+Pole/p39913

https://www.toolstation.com/shop/p69098

https://www.wifi-antennas.co.uk/antenna-wall-mount-kit-with-z-bend-stand-off.html

https://www.screwfix.com/p/labgear-29924lab-3m-aerial-mast/32094

If you need further information ogn@pilotaware.com

End of Document